Single Boiler Header Dimensions

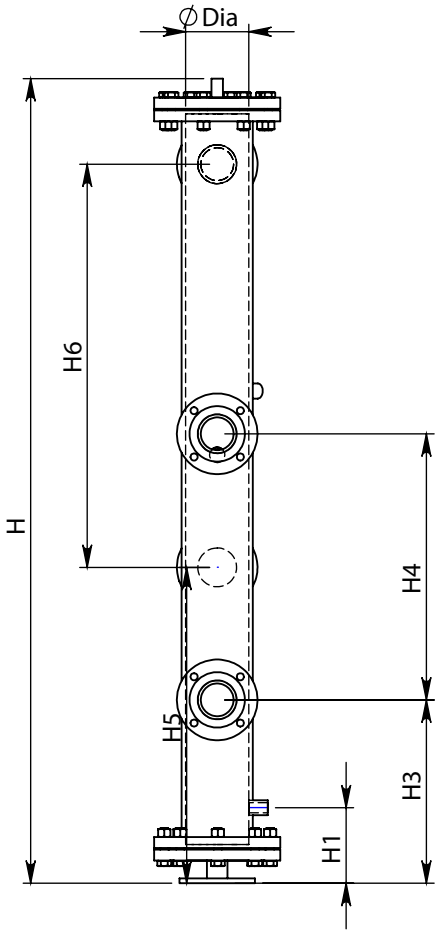

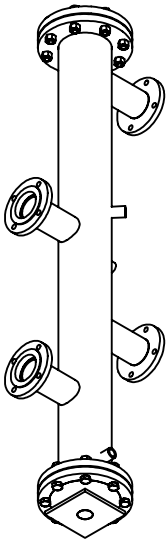

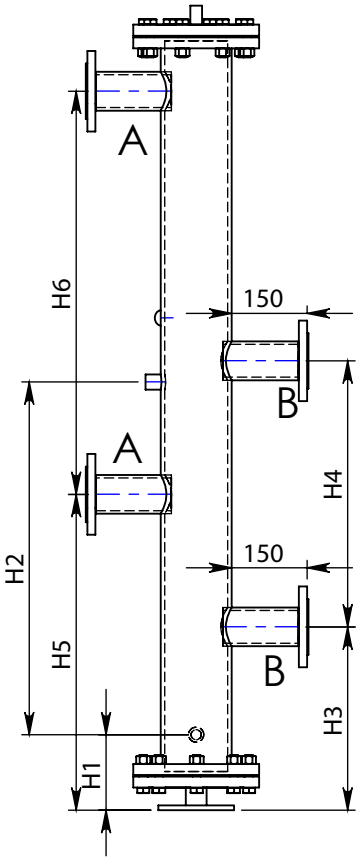

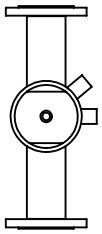

Top View
Top And Bottom
Flanges Removed

Header Type	Dia	H	H1	H2	H3	H4	H5	H6	Heating A	System B
Mikrovent 250	100	1600	150	700	364	528	630	790	50	50
Mikrovent 400	125	1600	150	700	364	528	630	790	65	65
Mikrovent 750	150	1700	150	755	310	640	630	790	80	100
Mikrovent 1000	200	1700	150	755	310	640	630	790	80	125